2360 Boswell Road
Chula Vista, CA 91914
Phone 619.216.1444
Fax 619.216.1474
E-Mail tech@explorerprocomp.com

Latest Revision:
8.26.2021

PRO COMP SUSPENSION

52417B/ BMX/ BMXR
K4033B/ T
K4042B/ T
2005-2006
Ford Super Duty 4WD F250-350

This document contains very important information that includes warranty information and instructions for resolving problems you may encounter. Please keep it in the vehicle as a permanent record.

Box 1 of 4-**PN 52417B/52417BMX-1**

Part #	Description	Qty.	Illus.	Page
90-6387	**HARDWARE PACK: Brake Line**	**1**	**-**	**-**
90-2159	**BRAKE LINE SPACER TUBE**	**2**	**-**	**-**
90-2055	**SWAY BAR DROP SPACER**	**4**	**6a**	**12**
90-6369	**HARDWARE PACK: Track Bar Drop**	**1**	**-**	**-**
70-0563001800	9/16" X 3" HEX BOLTS GR. 8	3	1	6
72-05600100816	9/16" STOVER NUTS ZINC	3	1	6
73-05600830	9/16" WASHER SAE GR. 8	6	1	6
90-6315	**HARDWARE PACK: Sway Bar Drop Top**	**3**	**-**	**-**
70-0431751800	7/16" X 1 3/4" GR. 8 HEX BOLT	4	6a,6b	12
73-04300034	7/16" HARDENED FLAT WASHER	8	6a,6b	12
72-04300100816	7/16" GR. 8 STOVER NUT	4	6a,6b	12
90-6340	**HARDWARE PACK: Sway Bar Drop Bottom**	**2**	**-**	**-**
70-0431251800	7/16" X 1 1/4" GR. 8 HEX BOLT	4	6a6b	12
73-04300034	7/16" HARDENED FLAT WASHER	8	6a,6b	12
72-04300100816	7/16" GR. 8 STOVER NUT	4	6a,6b	12
90-6379	**HARDWARE PACK: Brake line**	**1**	**-**	**-**
70-0251751500	1/4" X 1 3/4" GR. 5 BOLT	2	-	-
73-02500530	1/4" FLAT WASHER	4	-	-
72-025100512	1/4" NYLOCK NUT	2	-	-
90-1859	**SWAY BAR DROP BRACKET**	**2**	**6a,6b**	**12**
90-3198	**STEERING STABILIZER BRACKET**	**1**	**6a,6b**	**12**
20-65471	**HARDWARE PACK: 5/8" High nuts & Washers**	**1**	**9**	**16**
90-6390	**HARDWARE PACK: Bump Stop**	**1**	**-**	**-**
70-0435501800	7/16" X 6 1/2" USS GR. 8 HEX BOLT	2	7	13
73-04300034	7/16" SAE FLAT WASHER	4	7	13
72-04300100816	7/16" USS GR.8 STOVER NUT	2	7	13
13-90180	**U-BOLT**	**4**	**9**	**16**
90-3053	**CARRIER BEARING SPACER**	**1**	**10**	**17**
90-6337	**HARDWARE PACK: Leaf Spring**	**1**	**-**	**-**
97-165	10MM X 165MM CENTER PIN	2	9	16
72-01015008812	10MM-1.5 NUT (CENTER BOLT)	2	9	16
90-6399	**HARDWARE PACK: Radius Arms**	**1**	**-**	**-**
.180CNUCZ	18MM-2.5 STOVER NUT	1	4	8
.180NWHDZ	18MM FLAT WASHER	1	4	8
90-4117	**ALUMINUM COIL SPACER**	**2**	**5**	**10**
90-6373	**HARDWARE PACK: Clamps and Spacers**	**1**	**-**	**-**
171006ERL	**AN6 ADEL CLAMPS**	**4**	**5**	**10**
90-2501	**BRAKE LINE BRACKET SPACER**	**2**	**5**	**10**
90-3168	**COIL SPACER SIDE PLATE 6MM**	**2**	**5**	**10**
90-3158	**COIL SPACER SIDE PLATE 8MM**	**2**	**5**	**10**
90-6368	**HARDWARE PACK: Coil Spacer**	**1**	**-**	**-**
71-141002001000	14MM X 2.0 X 100MM 10.9 BOLT	2	5	10
73-01410930	14MM FLAT WASHER	2	5	10
70-0311001802	5/16" X 1" ALLEN HEAD BOLT	2	5	10
70-0311001800	5/16" X 1" GR.8 HEX HEAD BOLT	6	5	10
73-0310530	5/16" SAE GR. 8 FLAT WASHER	8	5	10
71-060151008800	6MM X 1.0 X 16MM BOLT 8.8	4	5	10
73-00608830	6MM FLAT WASHER	4	5	10

Part #	Description	Qty.	Illus.	Page
71-080201258800	8MM X 1.25 X 20MM BOLT 8.8	4	5	10
73-00808830	8MM FLAT WASHER	4	5	10
90-5054	**TRACK BAR DROP BRACKET**	**1**	**1,2,8**	**6,7,13**
90-2511	**BUMP STOP SPACER**	**2**	**7**	**13**
FD-700	**PITMAN ARM**	**1**	**1**	**6**
95-150F	**1 1/2" LIFT BLOCK**	**2**	**9**	**16**
90-3242	**REAR SHOCK BRACKET**	**1**	**-**	**-**
96-5002	**PITMAN ARM TOOL**	**1**	**2**	**7**
90-6595	**HARDWARE PACK: Pitman Arm Tool**	**1**	**-**	**-**
	Thread locker	**1**	**-**	**-**
0431251800	7/16" X 1 1/4" GR. 8 HEX BOLT	1	2	7
04300030	7/16" FLAT WASHER	1	2	7
04300100512	7/16" NYLOC NUT	2	**2**	**7**
	Box 2 of 4-**PN 52417B/52417BMX-2**			
90-2506	**RADIUS ARM– Passenger**	**1**	**-**	**-**
90-2509	**SWAY BAR DROP SUPPORT TUBE**	**1**	**6a,6b**	**12**
	Box 3 of 4-**PN 52417B/52417BMX-3**			
90-2502	**RADIUS ARM– Driver**	**1**	**4**	**8**
	Box 4 of 4-**PN 52417B-4**			
927553	**9000 SERIES FRONT SHOCKS**	**2**	**-**	**-**
934008	**9000 SERIES REAR SHOCKS**	**2**	**-**	**-**
	OR Box 4 of 4-**PN 52417BMX-4**			
MX6124	**MX-6 FRONT SHOCKS**	**2**	**-**	**-**
MX6018	**MX-6 REAR SHOCKS**	**2**	**-**	**-**
90-3215	**REAR SHOCK BRACKET- (Driver)**	**1**	**-**	**-**
90-3216	**REAR SHOCK BRACKET- (Passenger)**	**1**	**-**	**-**
	(OR) Box 4 of 4-**PN 52417BMXR-4**			
MX6066R	**MX6R FRONT SHOCKS**	**2**	**-**	**-**
MX6069R	**MX6R REAR SHOCKS**	**2**	**-**	**-**
90-6518	**HARDWARE PACK: MX6R Front Shocks**	**2**	**-**	**-**
600026	3/4" HOURGLASS URETHANE BUSHING	1	-	-
113600020	SLEEVE	1	-	-
	(OR) Box 926553B/ 932008B (**K4033T**)			
926553B	**FRONT SHOCKS**	**2**	**-**	**-**
932008B	**REAR SHOCKS**	**2**	**-**	**-**
	(OR) Box 927553B/ 934008B (**K4042T**)			
927553B	**FRONT SHOCKS**	**2**	**-**	**-**
934008B	**REAR SHOCKS**	**2**	**-**	**-**

The following parts are used in conjunction with this kit and must be purchased separately.

22415	**REAR LEAF SPRINGS**	**2**	**9**	**16**
24514	**COILS GASOLINE ENGINE**	**1**	**5**	**10**
OR				
24515	**COILS DIESEL ENGINE**	**1**	**5**	**10**

Special Tools:

Pitman Puller	**Snap-On PN**	**CJ1119B**
Tie Rod Separator	**Ford PN**	**T64P-3590-F**

Introduction:

- **This installation requires a professional mechanic!**
- We recommend that you have access to a factory service manual to assist in the disassembly and reassembly of your vehicle. It contains a wealth of detailed information.
- Prior to installation, carefully inspect the vehicle's steering and driveline systems paying close attention to the tie rod ends, ball joints, wheel bearing preload, pitman and idler arms. Additionally, check steering-to-frame and suspension-to-frame attaching points for stress cracks. The overall vehicle must be in excellent working condition. Repair or replace all worn or damaged parts!
- Read the instructions carefully and study the illustrations before attempting installation! You may save yourself a lot of extra work.
- Check the parts and hardware against the parts list to assure that your kit is complete. Separating parts according to the areas where they will be used and placing the hardware with the brackets before you begin will save installation time.
- Check the special equipment list and ensure the availability of these tools.
- Secure and properly block vehicle prior to beginning installation.
- ***ALWAYS*** wear safety glasses when using power tools or working under the vehicle!
- Use caution when cutting is required under the vehicle. The factory undercoating is flammable. Take appropriate precautions. **Have a fire extinguisher close at hand.**
- Foot pound torque readings are listed on the Torque Specifications chart at the end of the instructions. These are to be used unless specifically directed otherwise. Apply thread lock retaining compound where specified.
- ***Please note that while every effort is made to ensure that the installation of your Pro Comp lift kit is a positive experience, variations in construction and assembly in the vehicle manufacturing process will virtually ensure that some parts may seem difficult to install. Additionally, the current trend in manufacturing of vehicles results in a frame that is highly flexible and may shift slightly on disassembly prior to installation. The use of pry bars and tapered punches for alignment is considered normal and usually does not indicate a faulty product. However, if you are uncertain about some aspect of the installation process, please feel free to call our tech support department at the number listed on the cover page. We do not recommend that you modify the Pro Comp parts in any way as this will void any warranty expressed or implied by the Pro Comp Suspension company.***

Please Note:

⇒ Front suspension and head light realignment is necessary!

⇒ Speedometer and ABS recalibration will be necessary if larger tires (10% more than stock diameter) are installed.

⇒ **IT IS ADVISABLE THAT YOU HAVE HELP AVAILABLE WHEN INSTALLING THIS KIT. SOME COMPONENTS ARE HEAVY AND AWKWARD. AN ADDITIONAL SET OF HANDS IS GOOD INSURANCE AGAINST INJURY!**

Important!

Due to differences in manufacturing, dimensions and inflated measurements, tire and wheel combinations should be test fit prior to installation. Tire and wheel choice is crucial in assuring proper fit, performance, and the safety of your Pro Comp equipped vehicle. For this application, we recommend a wheel not to exceed 10” in width with a maximum backspacing of 5 3/4” must be used. Additionally, a quality tire of radial design, not exceeding 37” tall X 13.50” wide is also recommended. Violation of these recommendations will not be endorsed as acceptable by Pro Comp Suspension and will void any and all warranties either written or implied.

Before You Begin:

⇒ Read the instructions and study the illustrations before attempting the installation.

⇒ Separating the parts according to the areas where they will be used and placing the hardware with the brackets before you begin will save installation time.

⇒ Check the parts and hardware against the parts list to assure that your kit is complete.

⇒ ALWAYS wear safety glasses when using power tools or working beneath your vehicle.

⇒ A pitman arm removal tool and tie rod separating tool are required to perform the installation. See the special tools at the top of page 4.

⇒ Always use NEW cotter pins on re-assembly! (These items are NOT supplied)

NOTE: If you experience launch shutter and are *not* installing a Pro Comp traction bar kit, 4 degree rear axle shim kit (99-400) may be required to help remedy the problem.

Optional Equipment Available from your Pro Comp Distributor!

22415 REAR LEAF SPRINGS,
LIGHTS,
52480 CARRIER BEARING SHIM KIT,
599 ALIGNMENT CAM KIT,
50191 U-Bolt Kit,
72400: TRACTION BARS,
72099: TRACTION BAR MOUNTING KIT
219567: DUAL STEERING STABILIZER
99-400: 4 DEGREE REAR AXLE SHIM KIT
Also, check out our outstanding selection of Pro Comp tires to compliment your new installation!

Front Installation:

1. Position your vehicle on a smooth, flat, hard surface (i.e. concrete or asphalt). Block the rear tires and set the emergency brake.
2. Measure and record the distance from the center of each wheel to the top of its fender opening. Record below.

LF: _____ **RF**: _____

LR: _____ **RR**: _____

3. Place the vehicle in neutral. Place your floor jack under the front axle and raise the vehicle. Place jack stands under the frame rails and lower the frame onto the stands. Remove the jack and place the vehicle back in gear, set the emergency brake, and place blocks both in front and behind the rear wheels.
4. Remove the track bar bolt from the driver side frame mount. Save this hardware for re-use.
5. Remove cast track bar mount on driver side of frame. Save the bolts and pal nuts. Hardware will be reused.
6. Unbolt the sway bar from the sway bar end links on both sides of the vehicle. Rotate forward out of the work area.
7. If the vehicle is equipped with a factory steering stabilizer unbolt it from the frame mounting bracket and remove the factory bracket from the frame.
8. Remove the cotter pin and nut from drag link. Save the nut for reinstallation. Use a tie rod separator to separate drag link from Pitman arm.
9. Remove the sector Pitman arm retaining nut and save for reinstallation. Use a Pitman arm puller to remove the **OE** pitman arm. The threads of the sector shaft and the Pitman arm retaining nut must be cleaned of all factory dry adhesive.

IMPORTANT!: THE ENTIRE INSTALLATION PROCESS MUST BE DONE WITH HAND TOOLS TO ENSURE PROPER INSTALLATION. DO NOT USE IMPACT TOOLS.

10. Install new pitman arm on sector shaft. Oil the sector shaft threads to ensure a proper torque reading. Install Pitman arm retaining nut and tighten until snug. **See Illustration 1.**
11. Insert the key and unlock the steering wheel.
12. Install the Pitman arm torque tool **(90-5002)** to the Pitman arm using one of the previously removed **OE 14mm** track bar bracket outer retaining bolt and nut plate. **See Illustration 2.**
13. Secure the torque tool **(90-5002)** to the existing hole in the frame crossmember using the supplied **7/16" X 1 1/4"** bolt and hardware. **See Illustration 2.**

NOTE: The steering wheel may need to be turned in order for the hole in the torque tool and the frame crossmember to line up. Once the bolts are tightened the torque tool will align it's self proper-

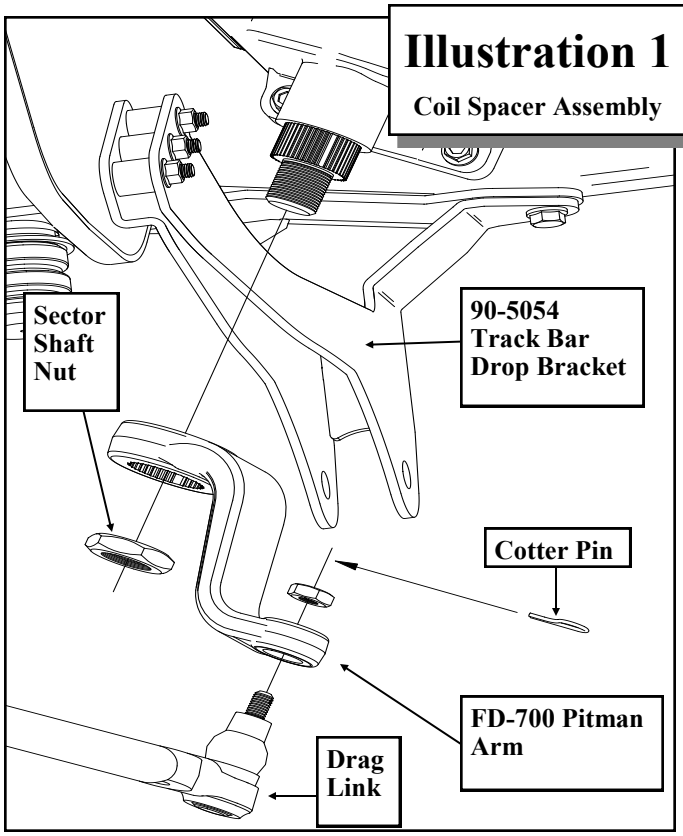

Illustration 1
Coil Spacer Assembly

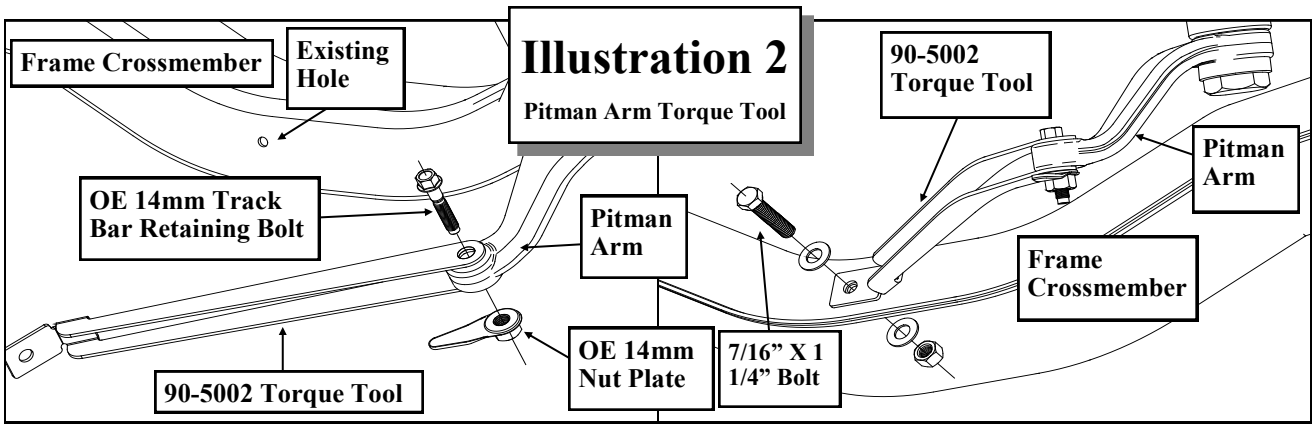

Illustration 2
Pitman Arm Torque Tool

ly.

NOTE: The use of the torque tool is to keep the Pitman arm from moving right or left, but allow for movement up the sector shaft. If you do not have this tool, a length of chain or a flat bar with two holes is a suitable replacement.

14. Torque the Pitman arm retaining nut to 375 ft./lbs.
15. With the torque tool **(90-5002)** still in place remove the pitman arm retaining nut. The threads of the sector shaft and the Pitman arm retaining nut ***MUST*** be cleaned using brake cleaner or another suitable method to remove the previously applied oil.
16. Use the entire supplied thread locking compound to thoroughly cover the entire surface of the threads on the Pitman arm retaining nut.
17. Reinstall the Pitman arm retaining nut to the sector shaft and torque to 350 ft./lbs.

    NOTE: Whether re-using the existing pitman arm retaining nut or replacing with a new nut, the supplied locking compound must be used.
18. Unbolt and remove the Pitman arm torque tool **(90-5002)** from the vehicle.

NOTE: Save this Pitman arm torque tool to add to your toolbox for any future Pitman arm installations.

19. Install track bar drop bracket **(90-5054)** using **(3) 9/16" X 3"** and **(2) OE** bolts. Use thread locker on the bolts. Torque **OE** the bolts to 129 ft. lbs. and the **9/16"** bolts to 110 ft. lbs. See ILLUSTRATION 3.
20. Unbolt the front brake line bracket from the lower spring perch. Save hardware for reuse.
21. Unbolt and unclip the ABS wiring connected to the radius arm. Save hardware for reuse.
22. On the driver side, unclip the axle vent line from inside the frame.

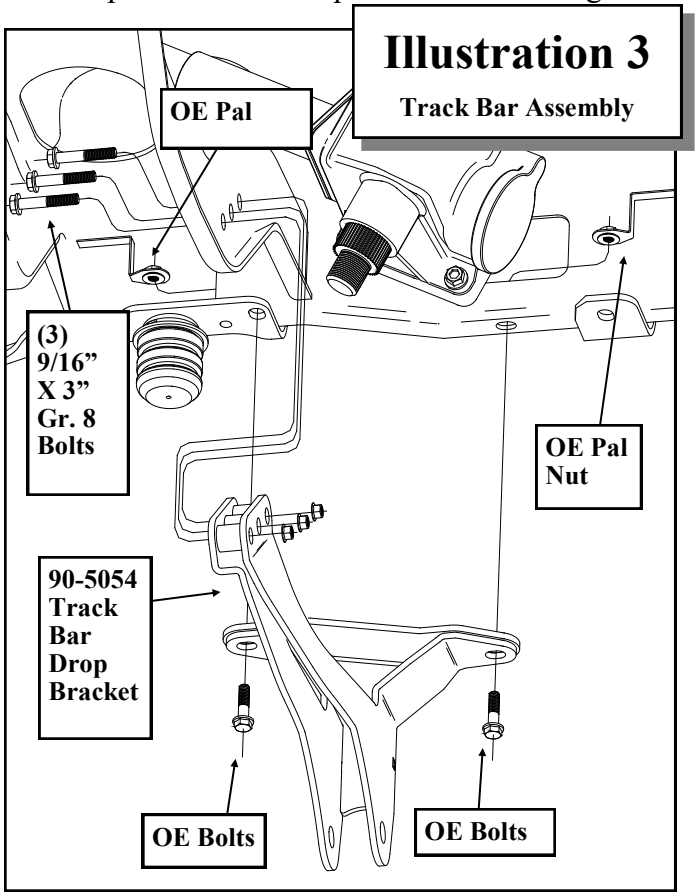

Illustration 3
Track Bar Assembly

Illustration 4

Driver Side Pro Comp Radius Arm Assembly

OE Nut

OE Bolts

Frame Mounting Pocket

Axle Mount

Front Axle

Radius Arm (90-2502)

18 mm Nut and Washer

OE Bolts

OE Nut

Driver Side Pro Comp Radius Arm Final Assembly

Inside View

Outside View

23. On the passenger side unclip the axle hub vacuum line from inside of the axle bump stop plate.
24. Raise the front axle enough to relieve tension on the shock hardware and remove the shocks from the vehicle.
25. Lower the front axle enough to remove the coil springs from the front spring bucket. Save the factory isolators for reuse.
26. Support the front axle with jack stands and place a floor jack under the rear of the differential housing.
27. Unbolt and remove the passenger side radius arm from the vehicle by taking out the **(3) OE** mounting bolts from the front axle and the rear frame mounting pocket.

NOTE: If installing a Pro Comp double shock hoop kit, drill holes and install the passenger side (90-3271) upper sway bar drop bracket to frame at this time.

28. On the driver side remove the rear radius arm to frame mounting bolt .
29. Using the floor jack carefully pivot the rear of the differential housing down. This will allow for easier installation of the new passenger side radius arm.
30. On the passenger side, install the new Pro Comp radius arm **(90-2506)** using the **(3)** previously removed **OE** bolts. Leave bolts loose. See ILLUSTRATION 4.
31. Remove the driver side radius arm from the vehicle.

NOTE: If installing a Pro Comp double shock hoop kit, drill holes and install the driver side (90-3270) upper sway bar drop bracket to frame at this time.

32. Install the driver side Pro Comp radius arm **(90-2502)** using the **(3)** previously removed **OE** bolts, **(2) OE** nuts and the supplied **(1) 18mm** nut and **(1)** hardened washer.

NOTE: Use thread locker on the OE bolts, nuts and new 18mm nut.

33. Torque the front axle mount bolts to 222 ft. lbs. Do not torque the rear mounting bolt until vehicle is on the ground. See ILLUSTRATION 4.
34. Unbolt the front brake line bracket from the upper spring bucket.
35. Measure approximately **7"** down from the mounting hole for the brake line bracket on the spring bucket. Center punch and drill a new **17/64"** hole for the new brake line mounting position. Make sure to drill away from the edge to ensure a flat mounting surface.
36. Using the brake line spacer **(90-2159)** and supplied **1/4" X 1 3/4"** bolt to secure the factory brake line to the newly drilled hole in the spring bucket. Carefully bend the bracket away from the frame to keep the lines and bracket from rubbing.

NOTE: Carefully pull down and bend the metal brake line down to create enough slack to accommodate the new lower mounting position. Be sure to tuck the lines back up under the frame.

NOTE: On the driver side make sure that the metal brake line does not come in contact with the steering shaft, rag joint or any moving parts or non-moving parts.

37. Unbolt the center bolt from the lower coil spring mount block and remove it from the vehicle.

NOTE: If installing a PRO COMP double shock hoop kit, install the lower mounting bracket at this time.

38. Insert the new aluminum coil spacer **(90-4117)** with the factory lower coil mount on top and secure with the supplied **14mm X 100mm** bolt. Do not tighten at this time. See ILLUSTRATION 5.

NOTE: Make sure the ABS line is behind the coil blocks

39. Install the **8mm** coil spacer side plate **(90-3158)** to the front of the factory lower coil mount. Using the supplied **8mm X 20mm** bolts in the 2 top holes. See ILLUSTRATION 5.

Illustration 5

Coil Spacer Assembly

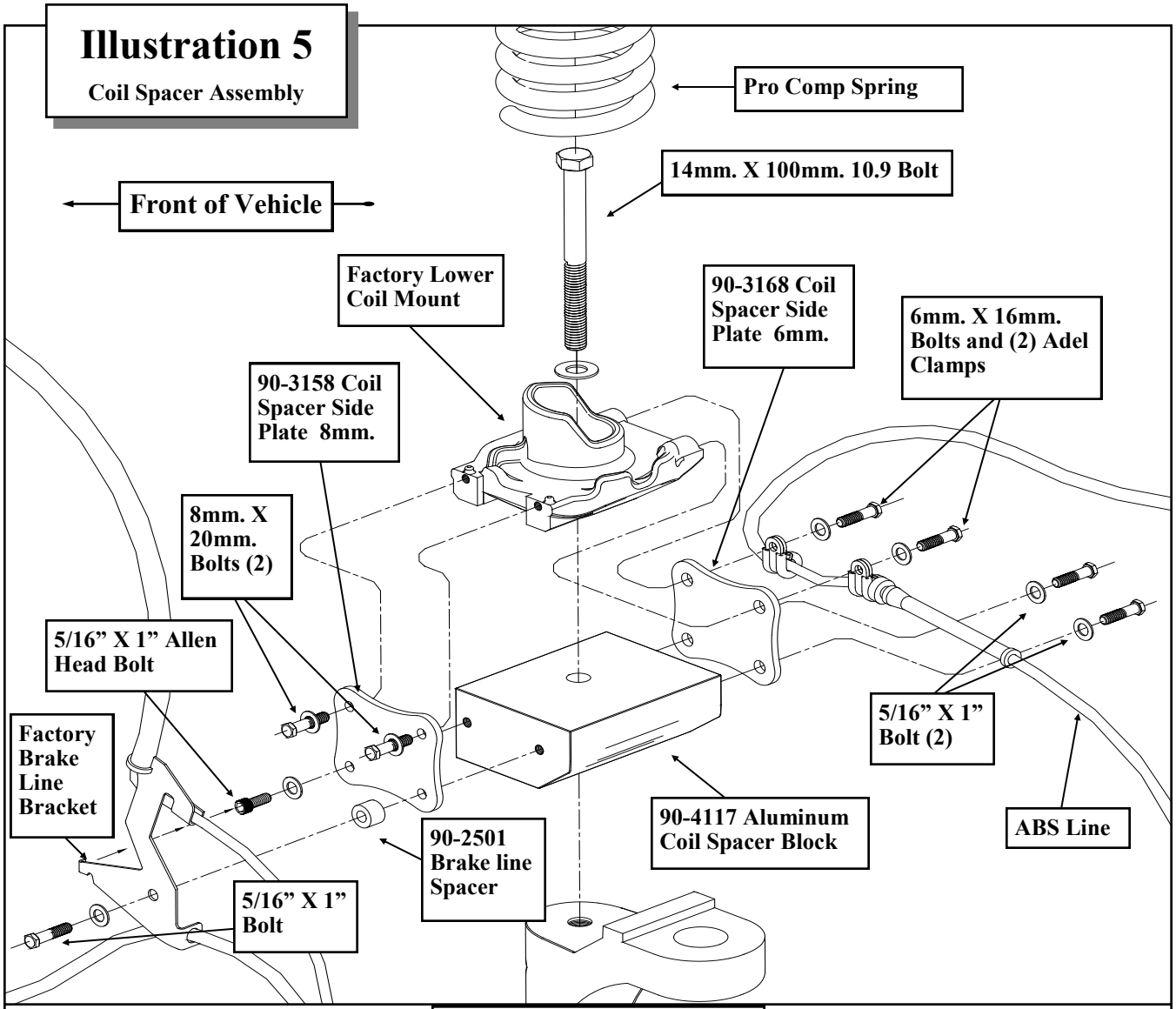

Coil Spacer Block Finished Assembly

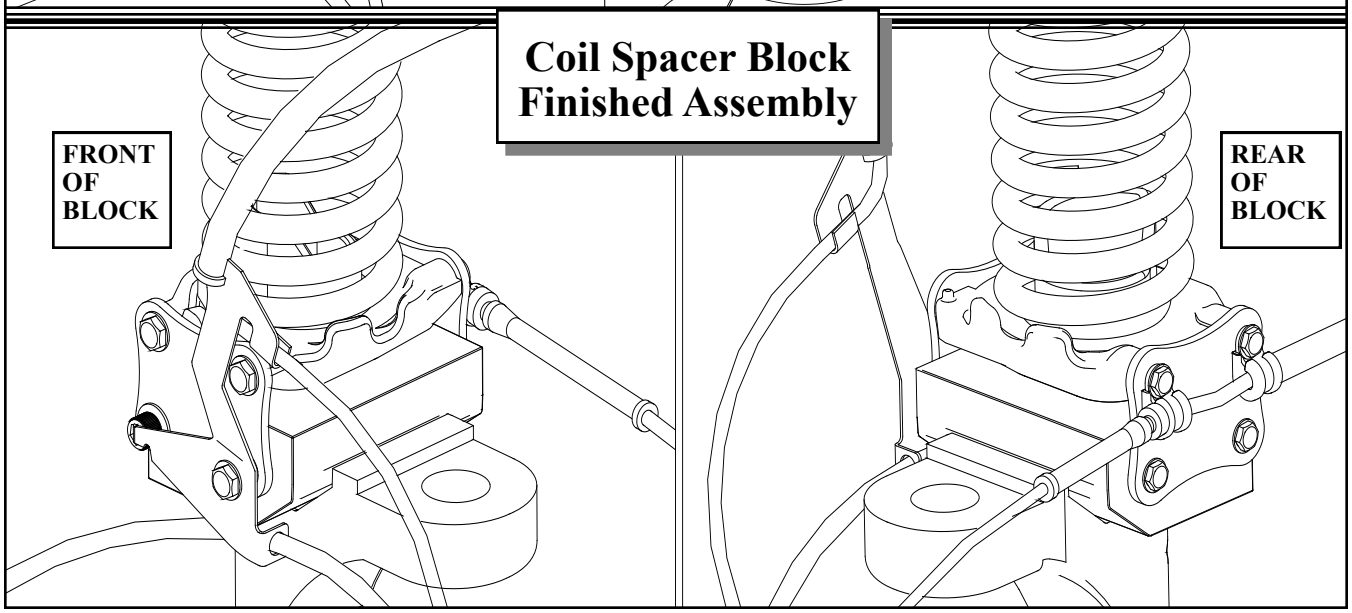

40. On the bottom front inside hole, insert the supplied **5/16" X 1"** Allen head bolt and hardware.
41. The remaining bolt, spacer and brake line bracket will be bolted on later.
42. On the rear of the factory lower coil mount install the **6mm** coil spacer side plate **(90-3168)** using the **(2)** supplied **6mm X 16mm**, bolts, hardware and supplied brake line clamps **(171006ERL)** in the top 2 holes. See ILLUSTRATION 5.
43. On the bottom rear holes secure using the supplied **(2) 5/16" X 1"** hex head bolts and hardware. See ILLUSTRATION 5.
44. Torque all spring block hardware.
45. Repeat on the remaining side of the vehicle.
46. Remove the sway bar and factory clips from the frame on both sides of the vehicle. Note orientation of the sway bar for reinstallation.
47. Install sway bar drop brackets **(90-1859)**. Assemble all components shown before you begin to tighten any hardware. Use the **(4) 7/16" X 1 3/4"** bolts, hardware and spacers **(4) (90-2055)** to secure the drop brackets to the frame. See ILLUSTRATION 6a.
48. On the driver side, bolt the sway bar support tube **(90-2509)**, above the lower radiator hose and cooler lines, to the drop bracket with **(2) 7/16" X 1 1/4"** and hardware. See ILLUSTRATION 6b.
49. On the passenger side, bolt the sway bar support tube **(90-2509)** and steering stabilizer bracket **(90-3198)** to the sway bar drop bracket using the **(2) 7/16" X 1 1/4", (1) 7/16" X 1 1/4"** and hardware. Use **(1) 7/16" X 1 1/4"** and hardware to bolt the steering stabilizer bracket to the tab on the sway bar support tube. See ILLUSTRATION 6b.

NOTE: If installing a PRO COMP double shock hoop kit skip the following step.

50. Bolt the factory sway bar to the drop brackets using the **(4) 7/16" X 1 3/4"** bolts and hardware. See ILLUSTRATION 6a.

NOTE: The smaller hole on each factory sway bar mount needs to be drilled out to 7/16" to accommodate the supplied 7/16" bolts.

51. Torque all **7/16**" sway bar hardware to 50 ft. lbs.
52. Remove the factory front bump stop from the bump stop mounting cup. Pliers and a back and forth rocking motion will assist in removal of the bump stop.
53. On the driver side, unbolt the bump stop mounting cup and drill out the factory hole in the frame and bump stop mounting cup to **7/16"**.
54. On the passenger side, unbolt the bump stop mounting cup. Measure in toward the engine **5/8"** from the center of the factory bump stop hole in the frame. Center punch and drill and the new hole **7/16"** in the frame. Drill out the bump stop mounting cup to **7/16"**.

NOTE: If installing a PRO COMP double shock hoop kit do so at this time.

55. Use the supplied **7/16" X 6 1/2"** bolt and hardware to bolt the bump stop drop **(90-2511)** and mounting cup to the bump stop hole in frame. See ILLUSTRATION 6.

    NOTE: Be sure to fit the tab from the mounting cup into the hole in the drop.

56. Reinstall the previously removed factory bump stop into the mounting cup on the new bump stop drop. See ILLUSTRATION 7.
57. Using the factory isolators install the supplied front coil springs **(24514 Gas or 24515 Diesel)** into the spring buckets and raise the axle into place. Make sure the coil spring seats properly on the lower spring perch.
58. Install the new shocks **(927553, MX6124 or MX6066R).** Torque the upper mount-

Illustration 6a

Sway Bar Drop Assembly

90-2055 Spacer

7/16" X 1 1/4" Bolt

90-1859 Sway Bar Drop Bracket

7/16" X 1 3/4" Bolt

90-2509 Sway Bar Drop Brace

90-2055 Spacer

7/16" X 1 3/4" Bolt

7/16" X 1 3/4" Bolt

Drill out the smaller sway bar mount hole to 7/16"

Sway Bar

FRONT OF VEHICLE

Finished Assembly Driver Side

7/16" X 1 1/4" Bolt

7/16" X 1 1/4" Bolt

7/16" X 1 3/4" Bolt

Drill out the smaller sway bar mount hole to 7/16"

Illustration 6b

Passenger Side Steering Stabilizer Bracket

Sway Bar Drop Brace Tab

7/16" X 1 1/4" Bolt

7/16" X 1 3/4" Bolt

7/16" X 1 1/4" Bolt

FINISHED ASSEMBLY

90-1859 Sway Bar Drop Bracket

OE Stabilizer Hardware

Steering Stabilizer Bracket 90-3198

Factory Steering Stabilizer

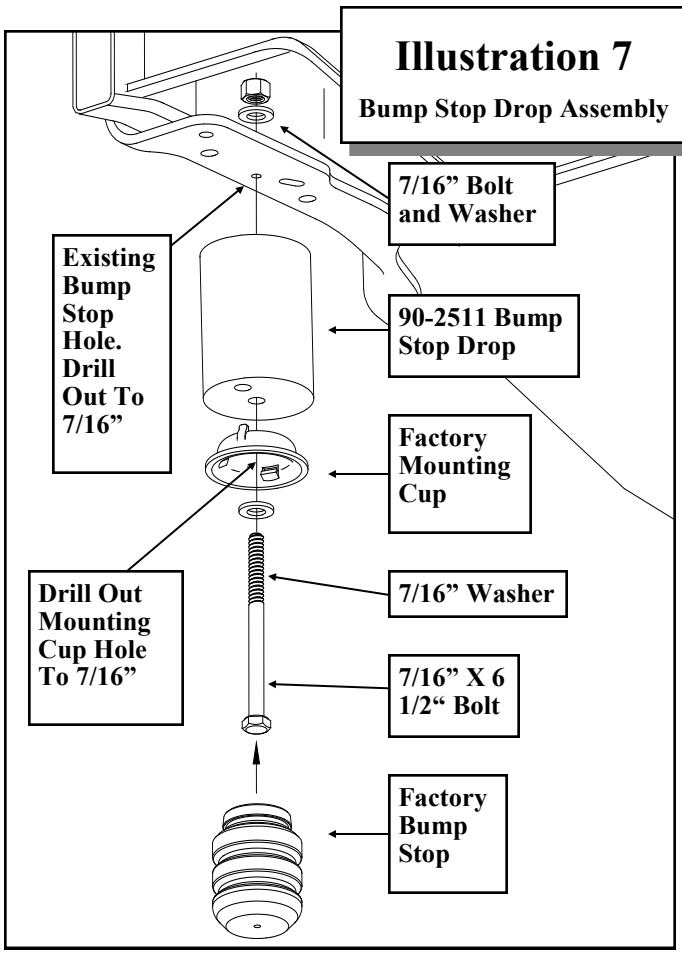

Illustration 7

Bump Stop Drop Assembly

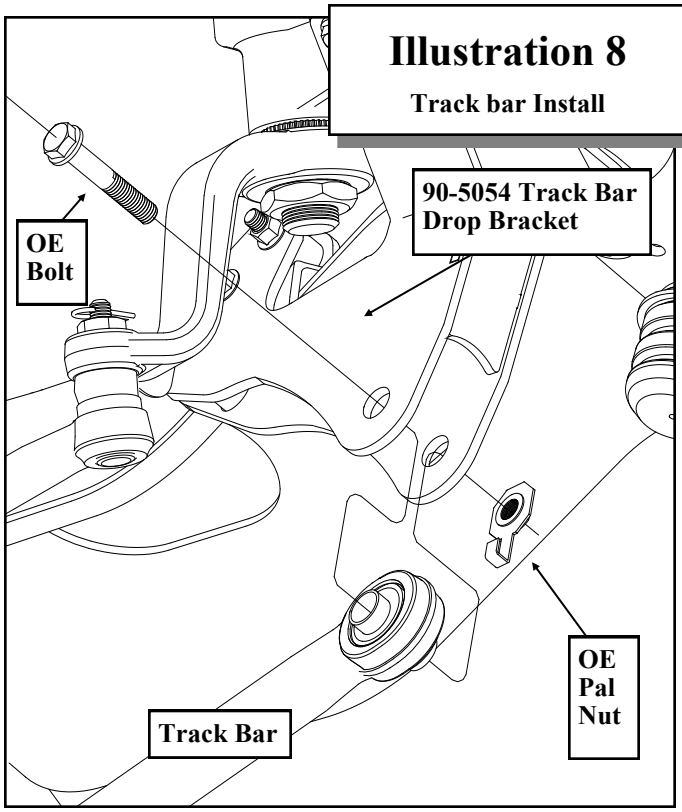

Illustration 8

Track bar Install

ing hardware to 46 ft. lbs. and the lower mounting hardware to 111 ft. lbs. Use thread locker on these bolts.

NOTE: If using any type of shocks other than the Pro Comp MX-6, MX-6R or 9000 series, check the front brake lines at full suspension droop to see if there is any stretching. If so, remount the brake lines to provide adequate slack.

NOTE: If installing the (MX6066R), Press out the existing sleeve and bushing on the shaft end and replace them with bushing (600026) and sleeve(113600020) from hardware pack (90-6518).

59. Install draglink end into pitman arm and torque draglink nut to 148 ft. lbs. Reinstall cotter pin.
60. Install the steering stabilizer stem to the new pro comp bracket **(90-3198)** using the previously removed **OE** hardware. See ILLUSTRATION 6b.

NOTE: If installing a PRO COMP double shock hoop kit skip the following step.

61. Re-attach the sway bar to the sway bar end links and fasten to 111 ft. lbs.
62. On the driver side, re clip the axle vent line on the frame providing adequate slack for the line at full droop.
63. On the passenger side, reposition the clip on the axle hub vacuum line to provide adequate slack to re-clip the line to the existing hole on the outside of the bump stop plate.

NOTE: Be sure that the newly re-routed vent line does not interfere with the travel of the bump stop.

64. Flip the ABS wiring clips 180 degrees and fasten to the tabs on the backside of the radius arms using the **OE** bolts.

NOTE: Use silicone to seal the ABS line push clip to the hole on the top of the Radius arm.

65. Remove the ABS line from the inner fender. Drill a new hole, using a **15/64"**

bit, **3"** lower in the fender to provide adequate slack for line and reattach the ABS line.

66. On the bottom front outside hole, insert the **5/16" X 1"** hex head bolt, hardware, brake line bracket spacer **(90-2501)** and the factory brake line bracket. See ILLUSTRATION 5.

NOTE: Make sure the tab on the brake line bracket fits into the head of the previously installed inner Allen head bolt.

67. Reinstall the front wheels and lower the vehicle to the ground. Torque to manufacturers specifications.

68. Torque the **OE** rear Radius arm bolts to 222 ft. lbs.

69. Reinstall the track bar into the Pro Comp track bar bracket **(90-5054)** using the **OE** bolt. Torque to 406 ft. lbs. See ILLUSTRATION 8.

NOTE: You may find that having someone inside the vehicle and moving the steering wheel from side to side will aid in the alignment of the track rod. DO NOT start the engine for this! You only have to move it enough to line the holes up on the track bar mount.

70. On both sides of the vehicle, check the routing of the brake lines and the ABS wire harnesses. There must be no pinching, rubbing, or stretching of either component. At full droop, cycle the steering from lock to lock while observing the reaction of these components. Reposition them if needed.

NOTES:

⇒ **On completion of the installation, have the suspension and headlights re-aligned.**

⇒ **After 100 miles recheck for proper torque on all newly installed hardware.**

⇒ **Recheck all hardware for tightness after off road use.**

Rear Installation:

1. Block the front tires and raise the rear of the vehicle. Support the frame with jack stands forward of the rear springs.
2. Remove the wheels and tires.
3. Remove the shocks on both sides of the vehicle. It may be necessary that you slightly raise the axle to unload the shocks for removal.
4. Unbolt the emergency brake line brackets from the upper spring plate on both sides of the vehicle. Save hardware for reuse.
5. Unclip the differential vent line from the frame.
6. If your vehicle is equipped with factory sway bar, unbolt it from the end links.
7. Support the rear axle with a floor jack and remove the **U-bolts** on the driver side. Slightly loosen the **U-bolts** on the passenger side.
8. Lower the rear axle and remove the factory block and rear leaf spring from the driver side only at this time.
9. The heavy factory leaf on the bottom of the leaf pack and the upper overload spring must be removed and used on the new Pro Comp rear leaf spring. Use C-clamps to hold the leaves together. Make note of the direction of the arch and the offset of the centering hole (long end forward/back etc.). Remove the **OE** center bolts and separate the spring pack.
10. Install the heavy leaf on the bottom of the new Pro Comp spring pack **(PN 22415)**. Install the overload with the spacer at the top of the Pro Comp spring, use the new center bolt and lock nut from pack **(90-6337)** if needed, again use C-clamps to assist in the assembly.

NOTE: Top spring plate center hole needs to be drilled out to 3/4" to clear nut from pack (90-6337) if the factory overload set up is not used.

11. Install the spring pack to the hangers using the factory hardware. Do not torque at this time.

NOTE: If installing traction bar kit 72099 install the rear mount at this time.

12. Reinstall the factory block and if noted above the **1 1/2"** aluminum lift block **(95-150F).** Make sure the pin fits into the hole on the spring perch. Use your floor jack to raise the axle to the spring making sure the pin on the factory leaf spring assembly fits into the hole on the lift block. Secure the assembly with the **5/8" U-bolts (PN 13-90180) or (PN 13-90190 from block kit 50191 for vehicles not equipped with a factory overload spring),** hi-nuts **(PN 20-65471)** and washers supplied. Do not torque the hi-nuts at this time. See ILLUSTRATION 9.

PLEASE NOTE:

* **FOR VEHICLES EQUIPPED WITH THE FACTORY 4" BLOCK, INSTALL THE SPRING PACK (22415) AND FACTORY 4" BLOCK ONLY.**
* **FOR VEHICLES EQUIPPED WITH THE FACTORY 2 1/4" BLOCK, INSTALL THE SPRING PACK (22415), FACTORY 2 1/4" BLOCK AND THE SUPPLIED 1 1/2" ALUMINUM BLOCK.**

See ILLUSTRATION 9.

NOTE: Make sure the block sits flush on the axle perch.

13. Repeat on the remaining side of the vehicle.
14. Install your new Pro Comp shocks **(PN 93 4008 or MX6018).** Torque the upper mounting hardware to 46 ft. lbs. and the lower mounting hardware to 66 ft. lbs. Use thread locker on these bolts.

NOTE: If installing 9000 series shocks, **ON THE DRIVER SIDE ONLY** ***remove the factory lower shock bracket and replace it with shock bracket (90-3242). Se-***

Illustration 9

Pro Comp Rear Spring Assembly

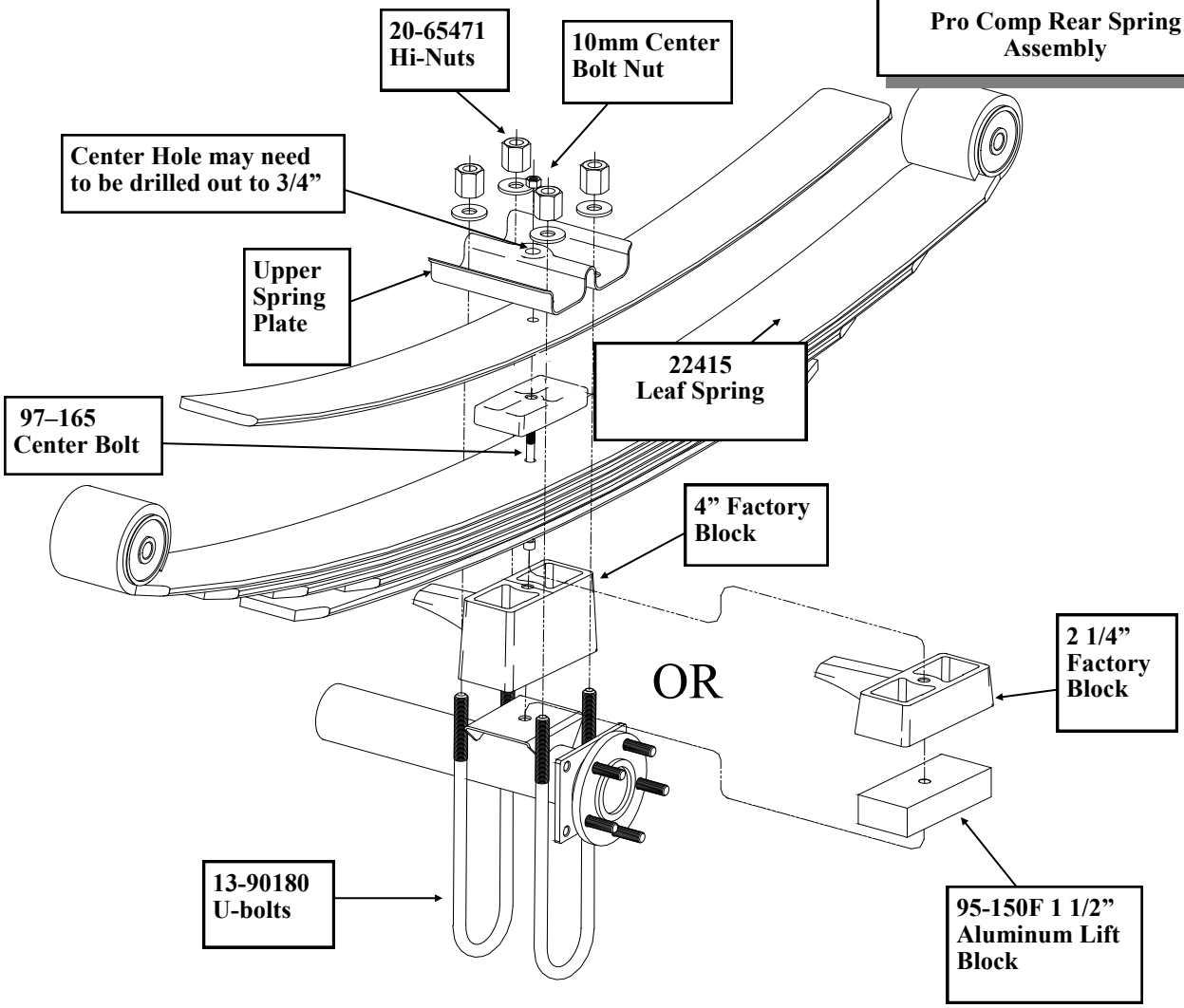

Rear Spacer Options

* **FOR VEHICLES EQUIPPED WITH THE FACTORY 4” BLOCK, INSTALL THE SPRING PACK (22415) AND FACTORY 4” BLOCK ONLY.**
* **FOR VEHICLES EQUIPPED WITH THE FACTORY 2 1/4” BLOCK, INSTALL THE SPRING PACK (22415), FACTORY 2 1/4” BLOCK AND THE SUPPLIED 1 1/2” ALUMINUM BLOCK.**

See Inset box after instruction 11.

cure the bracket to the axle using the previously removed OE hardware.

NOTE: If installing MX-6 shocks, remove the emergency brake bracket from the passenger side bracket. One at a time remove the factory rear shock brackets and install the new shock adapter brackets (90-3215 drvr and 90-3216 pass) to the rear axle. Reattach the emergency brake bracket to the passenger side bracket (90-3216) using the OE hardware. Make sure the bracket seats properly on the axle locator pin. Use the OE hardware and be sure to not over tighten the hardware.

15. On driver side, carefully bend down the bracket that secures the emergency brake to the frame and re-fasten the emergency brake line bracket to the upper spring plate.

16. Support the rear driveshaft and remove the carrier bearing housing bolts. Insert rear driveshaft spacer **(PN 90-3053)** between carrier bearing housing and frame mount. The open side will be facing the front and the notch goes on the top. Use the supplied **7/16" X 1 1/4"** bolts and hardware from hardware pack **(90-6340)** to bolt spacer to frame mount. Use the remaining **7/16" X 1 3/4"** bolts and hardware from hardware pack **(90-6315)** to secure the bearing housing to the spacer. Torque to 60 ft./lbs. See ILLUSTRATION 10.

NOTE: If vehicle came with a factory carrier bearing spacer it may need to be removed depending on the amount of driveline vibration experienced. Also additional shim kit PN 52480 can be purchased to alleviate this problem.

17. Re-clip the rear axle differential vent line on the frame to provide adequate slack.

18. If vehicle came equipped with a rear sway bar, Re-attach the rear sway bar to the end links. Secure with the previously removed **OE** hardware.

19. Reinstall the wheels and tires and lower the vehicle to the ground. Torque lug nuts to manufacturers specifications.

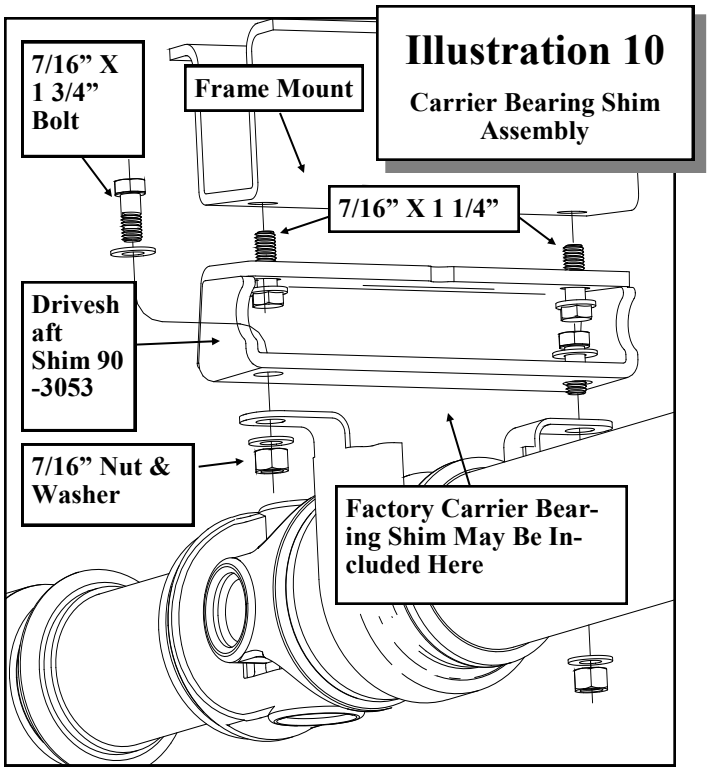

Illustration 10
Carrier Bearing Shim Assembly

20. Torque the spring mounts at this time. The front bolts are torqued to 250 ft. lbs. and the rear bolts are torqued to 185 ft. lbs. Torque the **5/8" U-bolts** to 120 ft. lbs.

21. Re-check the wheel lug torque on all four wheels at this time.

22. Re-check *all* hardware (both the front and the rear) for proper installation and torque!!

23. If you wish, you may trim the excess u-bolt thread length. If you do this you should leave approximately one inch of thread exposed after the **U-bolts** are torqued.

NOTES:

⇒ **On completion of the installation, have the suspension and headlights re-aligned.**

⇒ **After 100 miles recheck for proper torque on all newly installed hardware.**

⇒ **Recheck all hardware for tightness after off road use.**

Use this only as a guide for hardware without a called out torque specification in the instruction manual.

Bolt Torque and ID

Decimal System			Metric System			
All Torques in Ft. Lbs. Maximums						
Bolt Size	Grade 5	Grade8	Bolt Size	Class 9.8	Class 10.9	Class 12.9
5/16	15	20	M6	5	9	12
3/8	30	45	M8	18	23	27
7/16	45	60	M10	32	45	50
1/2	65	90	M12	55	75	90
9/16	95	130	M14	85	120	145
5/8	135	175	M16	130	165	210
3/4	185	280	M18	170	240	290

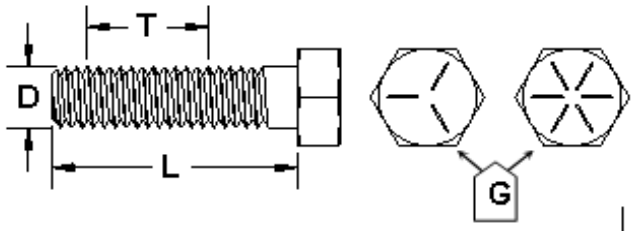

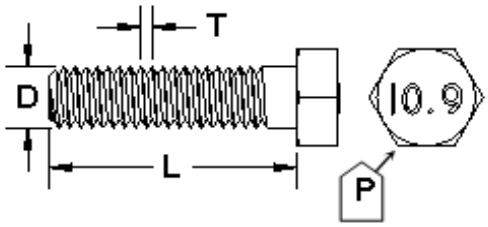

1/2-13x1.75 HHCS

D T L X

Grade 5 **Grade 8**

(No. of Marks + 2)

M12-1.25x50 HHCS

D T L X

G = Grade (Bolt Strength)
D = Nominal Diameter (Inches)
T = Thread Count (Threads per Inch)
L = Length (Inches)
X = Description (Hex Head Cap Screw)

P = Property Class (Bolt Strength)
D = Nominal Diameter (Millimeters)
T = Thread Pitch (Thread Width, mm)
L = Length (Millimeters)
X = Description (Hex Head Cap Screw)

Revision Page:

10.30.07: Latest Revision
8.26.21: Added T instance to K4033 and K4042. Created Revision Page.

Notice to Owner operator, Dealer and Installer:

Vehicles that have been enhanced for off-road performance often have unique handling characteristics due to the higher center of gravity and larger tires. This vehicle may handle, react and stop differently than many passenger cars or unmodified vehicles, both on and off–road. You must drive your vehicle safely! Extreme care should always be taken to prevent vehicle rollover or loss of control, which can result in serious injury or even death. Always avoid sudden sharp turns or abrupt maneuvers and allow more time and distance for braking! Pro Comp reminds you to fasten your seat belts at all times and reduce speed! We will gladly answer any questions concerning the design, function, maintenance and correct use of our products.

Please make sure your Dealer/Installer explains and delivers all warning notices, warranty forms and instruction sheets included with Pro Comp product.

Application listings in this catalog have been carefully fit checked for each model and year denoted. However, Pro Comp reserves the right to update as necessary, without notice, and will not be held responsible for misprints, changes or variations made by vehicle manufacturers. Please call when in question regarding new model year, vehicles not listed by specific body or chassis styles or vehicles not originally distributed in the USA.

Please note that certain mechanical aspects of any suspension lift product may accelerate ordinary wear of original equipment components. Further, installation of certain Pro Comp products may void the vehicle's factory warranty as it pertains to certain covered parts; it is the consumer's responsibility to check with their local dealer for warranty coverage before installation of the lift.

Warranty and Return policy:

Pro Comp warranties its full line of products to be free from defects in workmanship and materials. Pro Comp's obligation under this warranty is limited to repair or replacement, at Pro Comp's option, of the defective product. Any and all costs of removal, installation, freight or incidental or consequential damages are expressly excluded from this warranty. Pro Comp is not responsible for damages and / or warranty of other vehicle parts related or non-related to the installation of Pro Comp product. A consumer who makes the decision to modify his vehicle with aftermarket components of any kind will assume all risk and responsibility for potential damages incurred as a result of their chosen modifications. Warranty coverage does not include consumer opinions regarding ride comfort, fitment and design. Warranty claims can be made directly with Pro Comp or at any factory authorized Pro Comp dealer.

IMPORTANT! To validate the warranty on this purchase please be sure to mail in the warranty card.

Claims not covered under warranty-

- Parts subject to normal wear, this includes bushings, bump stops, ball joints, tie rod ends and heim joints
  - Discontinued products at Pro Comp's discretion
- Bent or dented product
- Finish after 90 days
- Leaf or coil springs used without proper bump stops
- Light bulbs
- Products with evident damage caused by abrasion or contact with other items
- Damage caused as a result of not following recommendations or requirements called out in the installation manuals
- Products used in applications other than listed in Pro Comp's catalog
- Components or accessories used in conjunction with other manufacturer's systems
- Tire & Wheel Warranty as per Pro Competition Tire Company policy
- Warranty claims without "Proof of Purchase"
- Pro Comp Pro Runner coil over shocks are considered a serviceable shock with a one-year warranty against leakage only. Rebuild service and replacement parts will be available and sold separately by Pro Comp. Contact Pro Comp for specific service charges.
- Pro Comp accepts no responsibility for any altered product, improper installation, lack of or improper maintenance, or improper use of our products.

E-Mail: tech@explorerprocomp.com
Website: www.explorerprocomp.com
Fax: (619) 216-1474
Ph: (619) 216-1444

PLACE

WARRANTY REGISTRATION NUMBER

HERE: _____