CE-9122R TJ rear bumpstop kit

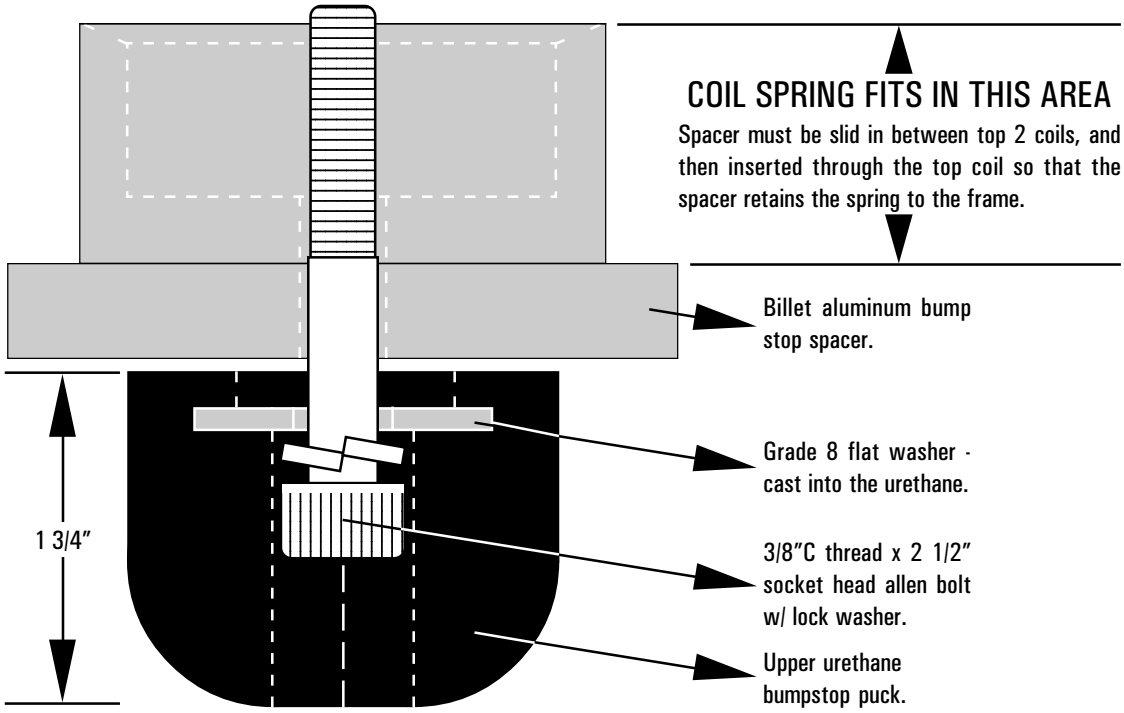

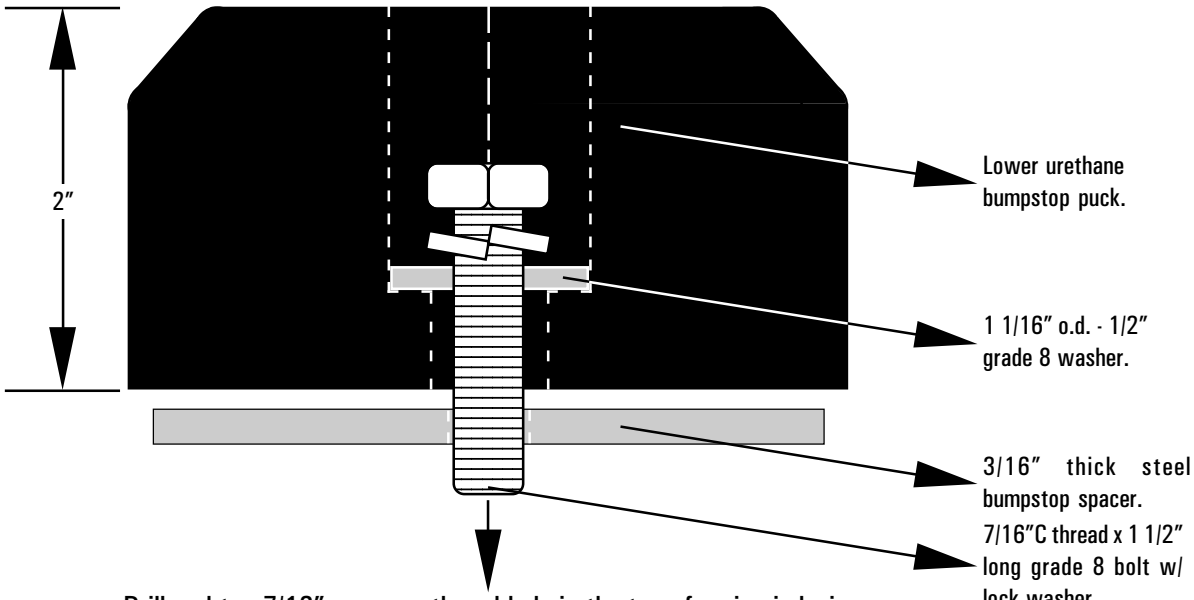

Drill and tap 7/16" a course thread hole in the top of spring indexing boss on the frame, and the coil spring pad on the housing.

If you have any further questions during the installation of this kit, please contact a Currie technical representative at:

RockJock 4x4 / Currie Enterprises
1480 N. Tustin Ave.
Anaheim, Ca. 92807

www.rockjock4x4.com
P: (714) 528-6957
F: (714) 528-2338