INSTALLATION INSTRUCTIONS

APPLICATION: 1997-UP FORD F150, F250 LIGHT DUTY
1998-02 EXPEDITION 4X4 ONLY

AUTOMOTIVE PRODUCTS, INC.

SPORTSMAN ASSEMBLY

41-0245
44-0240

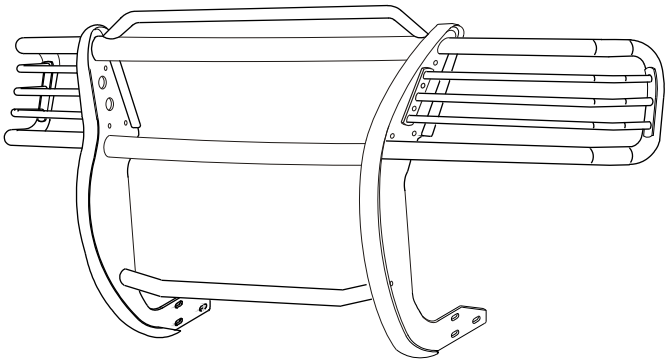

PARTS KIT CONTENTS

QTY	DESCRIPTION
2	UPRIGHT
2	WING ASSY. With LIGHT GUARDS
1	TOP TUBE / HOOD BAR ASSEMBLY
1	BOTTOM TUBE
1	CENTER TUBE
2	LIGHT MOUNT
2	MOUNT BRACKET
4	1/2-13 x 1.50” SS FLAT HEAD BOLT
12	1/2” FLAT WASHER
6	1/2” LOCK WASHER / HEX NUT
2	TOP BRACKET
2	12MM JAM NUT

QTY	DESCRIPTION
4	2 3/4” OD PLASTIC WASHER
2	1 5/8” OD PLASTIC WASHER
2	3/8” NYLON WASHER
8	1.00” OD PLASTIC WASHERS
16	3/8” S.S. FLAT WASHER
2	3/8-16 x 1.00” THREAD CUTTING SCREW
10	3/8-16 x 1.00” BUTTON HEAD CAP SCREW
2	3/8” INTERNAL TOOTH LOCK WASHER
6	1/2-13 x 1.25” HEX HEAD BOLT
2	3/8-16 x 1.00” HEX HEAD BOLT
2	3/8-16 HEX NUT / LOCK WASHER
4	3/8” FLAT WASHER
8	3/8” S.S. LOCK NUTS

Fasteners are contained in bolt kits: **44-0240:** 60-1223, 60-1160, 60-1198 /
41-0245: 60-1216, 60-1232, 60-1244

TOOL REQUIRED

3/4” SOCKET	3/4” WRENCH	RATCHET
15MM SOCKET	TORQUE WRENCH	5/8” WRENCH
5/16” HEX WRENCH	7/32” HEX WRENCH	19MM SOCKET
9/16” WRENCH	9/16” SOCKET	

STEP 1. Remove the contents from the box and check for any damage. Verify all parts against the parts list.

STEP 2. Read and understand instructions completely before beginning installation.

STEP 3. Remove the tow hook by removing bolt 2 and loosening bolt 1, then slide tow hook toward rear and remove. See Figure 2.

STEP 4. Remove bolt 1, making sure the nut plate inside frame stays aligned with the frame hole for bolt 1.

STEP 5. Hang mount bracket in position by partially threading bolt 1 (without the tow hook) into nut plate.

STEP 6. Align the nut plate by rotating bolt 1 back and forth so that bolt 2 can be inserted..

STEP 7. Position the tow hook in place by hanging it by the slotted end first, then insert bolt 2.

STEP 8. Tighten mount bolts so that mount bracket is loose.

STEP 9. Follow step 3 through 8 to install the opposite side mount bracket.

STEP 10. From inside of frame behind bumper, position top bracket so that front of bracket protrudes between top of bumper and bottom of grille. (Push down on bumper cover to slide bracket through). Locate bumper bolt ends (front side of frame), then position hole of bracket on the end of the top bolt, over existing nut. Hand tighten supplied 12mm jam nut over bracket. Repeat for other side. See Figure 2.

NOTE: 1997-98 models use lower hole on bracket. 1999-01 models use upper hole on bracket.

STEP11. Determine Passenger/Driver Side Uprights and Top, Center and Bottom Tubes (raised side of bolt holes face each other.) See Figure 1.

STEP 12. Fasten Uprights to Top, Center and Bottom Tubes using (4) 1/2-13 x 1.50” Stainless Steel Flat Head Bolts, (4) 2 3/4” OD Plastic Washers, (2) 3/8-16 x 1.00” Stainless Steel Button Head Cap Screws, (2) 3/8” Stainless Steel Internal Tooth Lock Washers and (2) 1 5/8” OD Plastic Washers. Level Tubes and torque: 1/2” fasteners to 60 FT. LBS. And 3/8” Fasteners to 30 FT. LBS.

STEP 13. Align the rearmost slot on the Center Section with the rearmost slot in the Bracket. Fasten Center Section to Bracket using (1) 1/2-13 x 1.25” Hex Head Bolt, (2) 1/2” Flat Washers, (1) 1/2” Lock Washer and (1) 1/2” Hex Nut. Repeat for opposite side. Leave loose.

STEP 14. Rotate unit up towards vehicle until remaining slots are aligned. Fasten with remaining 1/2” fasteners. Attach Top Bracket using (2) 3/8-16 x 1.00” Hex Head Bolts, (6) 3/8” Flat Washers, (6) 3/8” Lock Washers and (2) 3/8” Nuts. Leave loose. See Figure 2.

STEP 15. Level and adjust Center Section. Tighten and torque: Tow Hook Bolts to 75 FT. LBS; 1/2” fasteners to 65 FT. LBS; 12mm nuts to 60 FT. LBS. and 3/8” fasteners to 30 FT. LBS.

STEP 16. Determine Passenger and Driver Wing Assemblies. See Figure 1. Install Driver Side Wing Assembly using (4) 3/8-16 x 1.00” Stainless Steel Button Head Cap Screws, (8) 3/8” Flat Stainless Steel Washers, (4) 3/8-16” Stainless Steel Lock Nuts and (4) 1.00” OD Plastic Washers. Tighten and torque to 35 FT. LBS. Repeat for opposite side.

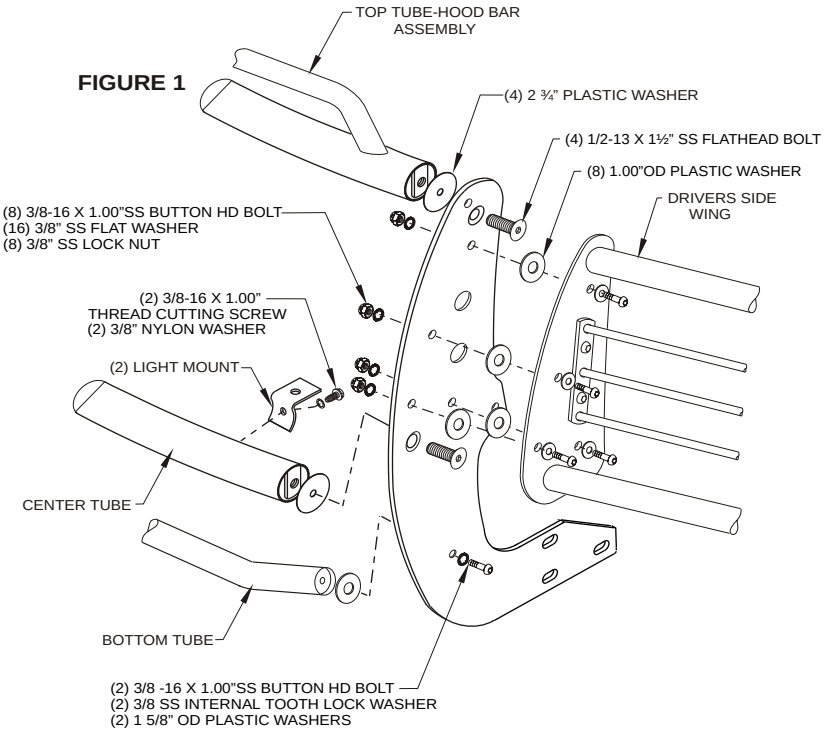

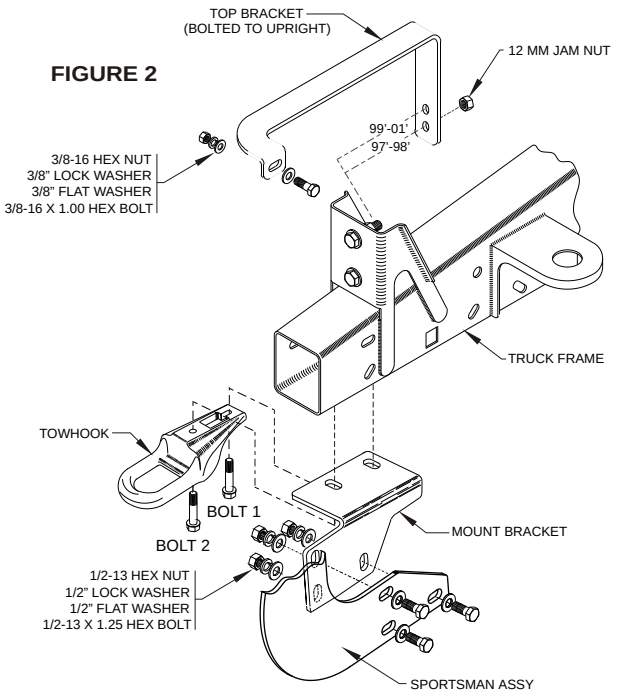

INSTALLATION VIEW OF DRIVER SIDE PASSENGER SIDE OPPOSITE

Finish protection - Westin products have a high quality finish that must be cared for like any other exposed finish on the vehicle. Protect the finish with a non-abrasive automotive wax (pure carnauba, for example) on a regular basis. The use of cleaner wax or any compound which contains an abrasive is detrimental, as the compounds scratch the finish and open it to corrosion.

Westin Automotive Products, Inc.
5200 N. Irwindale Ave. Suite 220
Irwindale, Ca. 91706

Thank You for choosing Westin products
For additional installation assistance please call
Customer service (800) 793-7846 or (507) 375-3559